SILICON INFRATECH™

BUILD STRONG INFRA

MANUFACTURER

U-DRAIN | BOX CULVERT | PRECAST WALL

AND CUSTOMIZED CONCRETE PRODUCTS

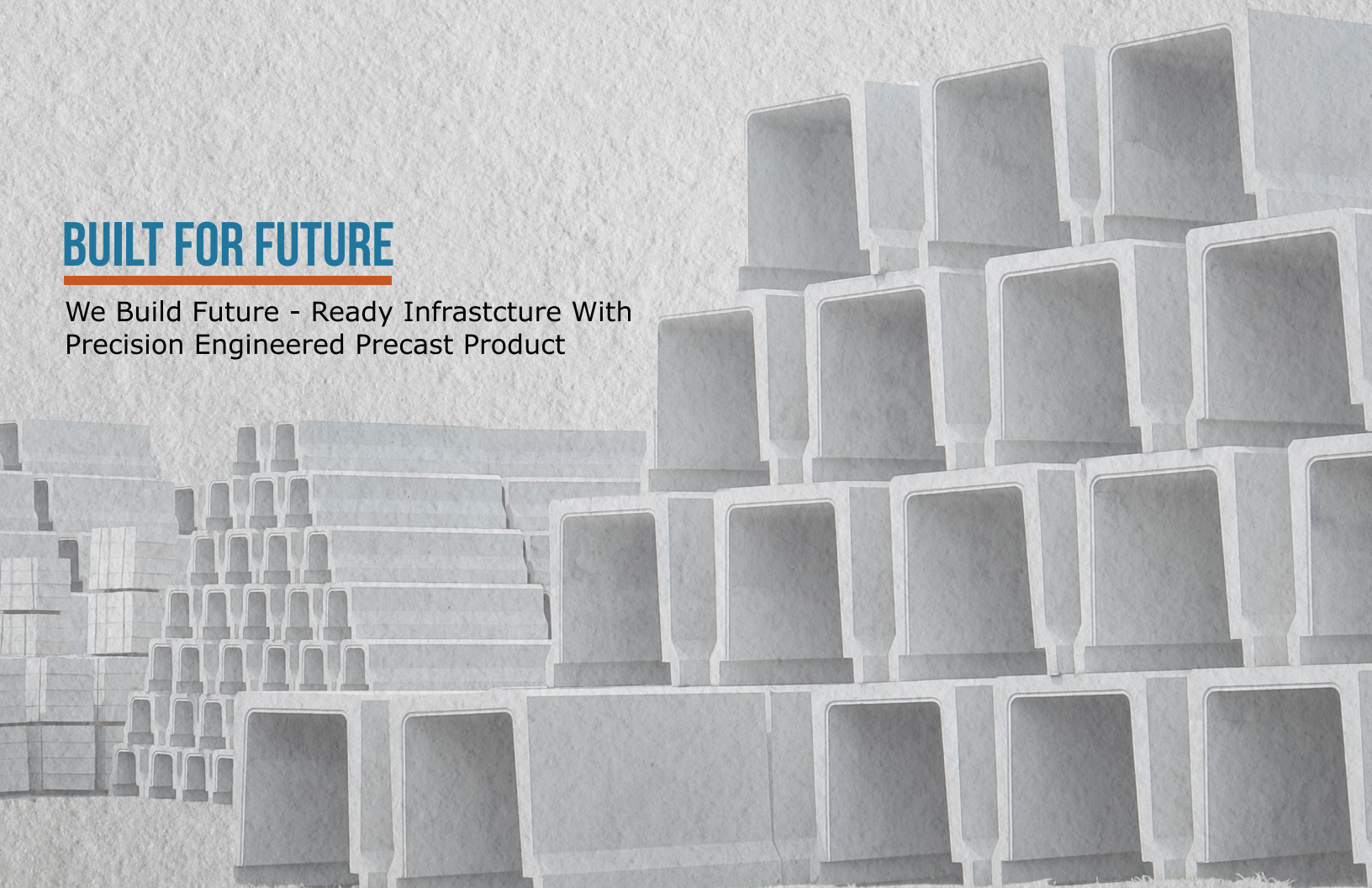

BUILT FOR FUTURE

We Build Future - Ready Infrastcture With Precision Engineered Precast Product

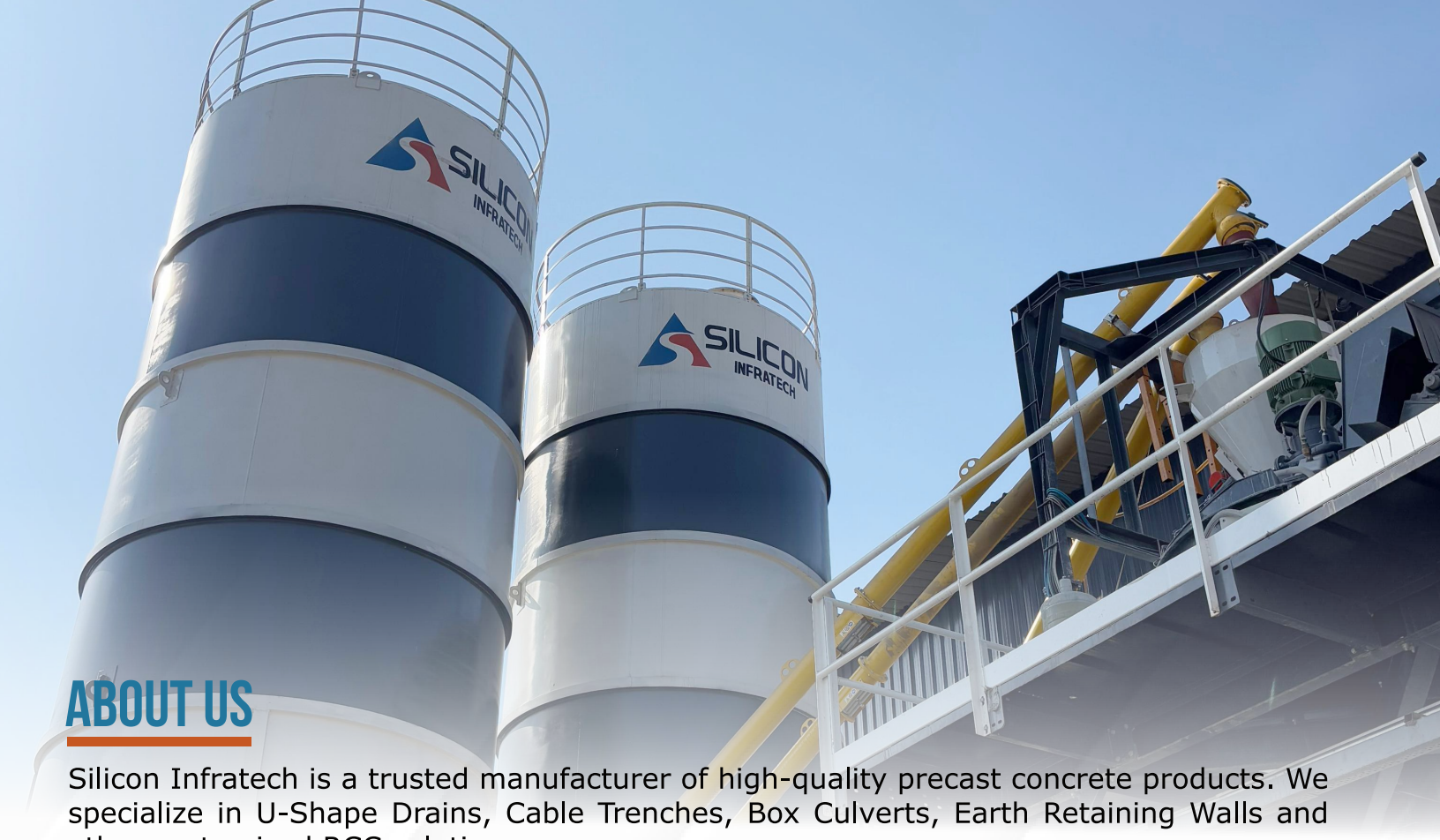

ABOUT US

Silicon Infratech is a trusted manufacturer of high-quality precast concrete products. We specialize in U-Shape Drains, Cable Trenches, Box Culverts, Earth Retaining Walls and other customized RCC solutions.

QUALITY ASSURANCE

At Silicon Infratech, Quality is our promise. We use top-grade materials and expert craftsmanship to deliver precast products that exceed industry standards.

MANUFACTURING EXCELLENCE

At Silicon Infratech, we combine advanced technology with expert craftsmanship to create top-quality precast products. Our state-of-the-art facilities ensure precision, reliability and eco-friendly production.

VISION

By 2030, Silicon Infratech aims to be India's top precast concrete manufacturer, known for superior and sustainable products. We are committed to supporting key sectors such as power, water & sewage, railways, industrial infrastructure and roads & bridges, contributing to a stronger and more progressive nation.

MISSON

At Silicon Infratech, our mission is to be a leader in precast concrete manufacturing, setting new benchmarks in strength, quality and sustainability. We aim to build a future-ready world with innovative and reliable infrastructure solutions.

OUR PROJECTS

At Silicon Infratech, we take pride in delivering high-quality U Shape Drain solutions for a wide range of infrastructure projects. Designed for efficient water management and long-term performance, our U Shape Drains are manufactured with precision and strength to withstand heavy loads and harsh environmental conditions

- ✓ Highway and Road Drainage
- ✓ Industrial and Commercial Complexes
- ✓ Municipal and Urban Infrastructure
- ✓ Residential and Township Projects

OUR COMMITMENT

We focus on quality, innovation and customer satisfaction. Our durable, precise products are backed by strict quality control for reliable, long-lasting solutions.

OUR PROCESS

MOLD PREPARATION & SETUP

- ✓ Design and clean the mold.
- ✓ Apply a release agent for easy removal.

CONCRETE MIXING & POURING

- ✓ Mix concrete to the required consistency.
- ✓ Pour into the mold and ensure even filling.

CURING & FINISHING

- ✓ Cure concrete for strength.
- ✓ Demold, smooth edges and finish surface.

CONCRETE CURING SOLUTIONS - MADE IN GERMANY

For the First Time in Gujarat – Only at Our Plant.

We proudly introduce **Kraft Curing Systems – MADE IN GERMANY,** now exclusively available at our production unit. No other precast manufacturer in Gujarat has this advanced curing technology. Kraft's automated system ensures **fast curing, superior strength, and perfect surface finish** for every U Drain, Box Culvert, or Precast Wall we produce. With controlled temperature and humidity, we guarantee consistent quality in every piece, even in extreme weather conditions. Experience the German-engineered edge in precast concrete – only with us.

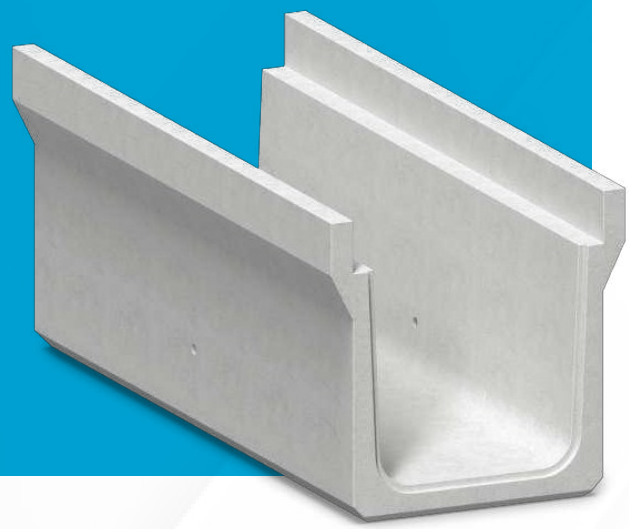

U SHAPE DRAIN (HEAVY)

APPLICATIONS

Ideal for managing surface water along roads, factories and urban infrastructure.

SECTION

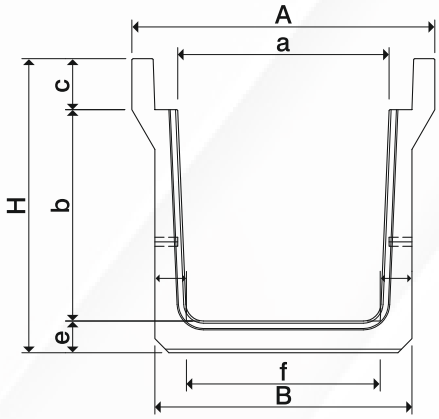

SIDE VIEW

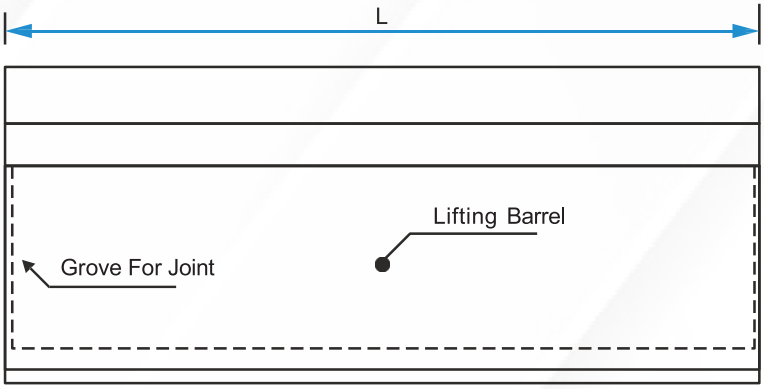

Size (mm)	Dimensions of U-shape drain (mm)								
a x b	L	A	B	H	a	b	c	e	f
300 x 300	2000	540	420	480	300	300	110	70	280
450 x 450	2000	700	590	660	450	450	130	80	430
600 x 600	2000	860	730	835	600	600	145	90	550
750 x 750	2000	1050	890	1000	750	750	150	100	690
900 x 900	2000	1200	1070	1170	900	900	150	120	830
1200 x 1200	2000	1500	1340	1470	1200	1200	150	120	1100

LOAD CARRYING CAPACITY : 5 T WHEEL LOAD

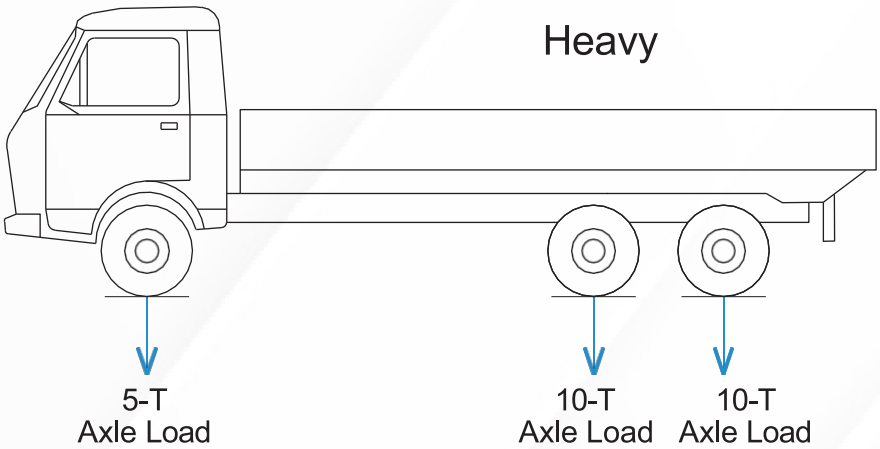

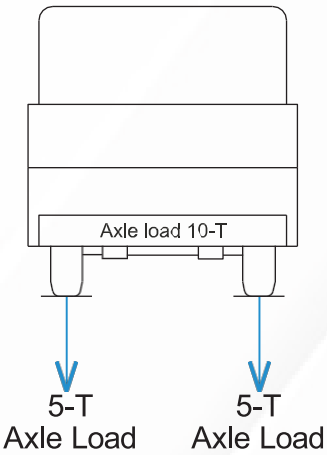

STANDARD COVER

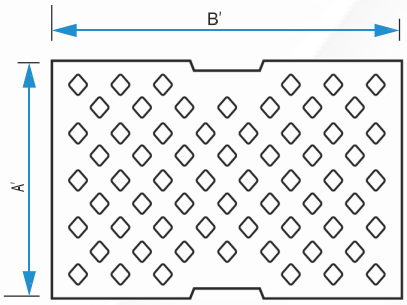

Cover plan

PERFORATED COVER

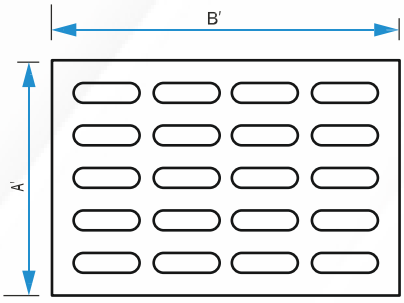

Cover plan

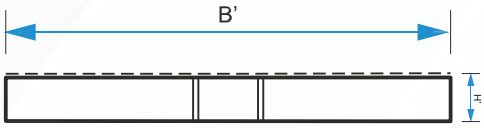

Cover Side View
Cover Hole

TYPICAL JOINT DETAILS

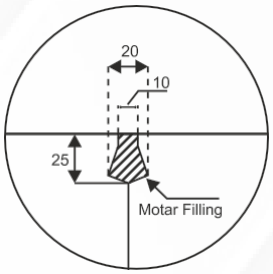

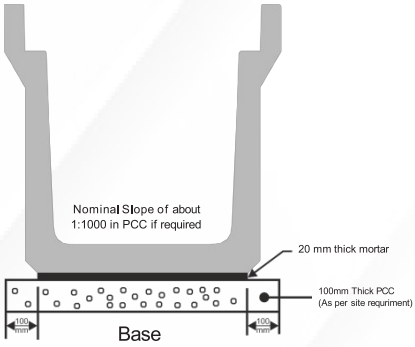

Size (mm)	Lid Dimension (mm)		
a x b	A'	B'	H'
300 x 300	500	415	110
450 x 450	500	575	130
600 x 600	500	730	145
750 x 750	500	900	150
900 x 900	500	1050	150
1200 x 1200	500	1350	150

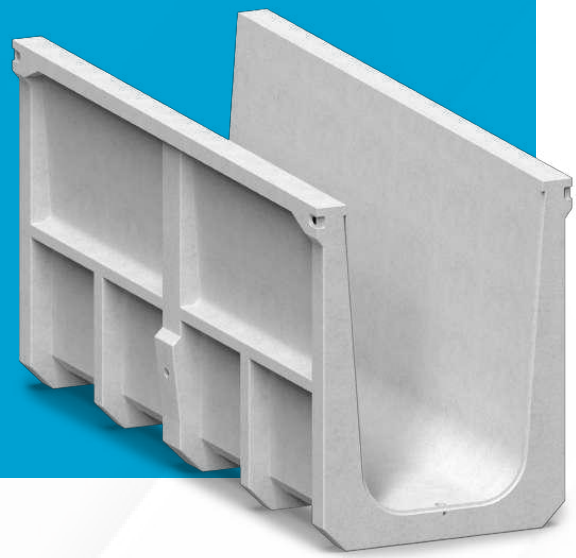

FT - FLUME

APPLICATIONS

Idea for stormwater, power ducts and road crossings-an efficient pipe culvert alternative.

TYPICAL SECTION OF FT-FLUNE AS OPEN STROM WATER DRAIN

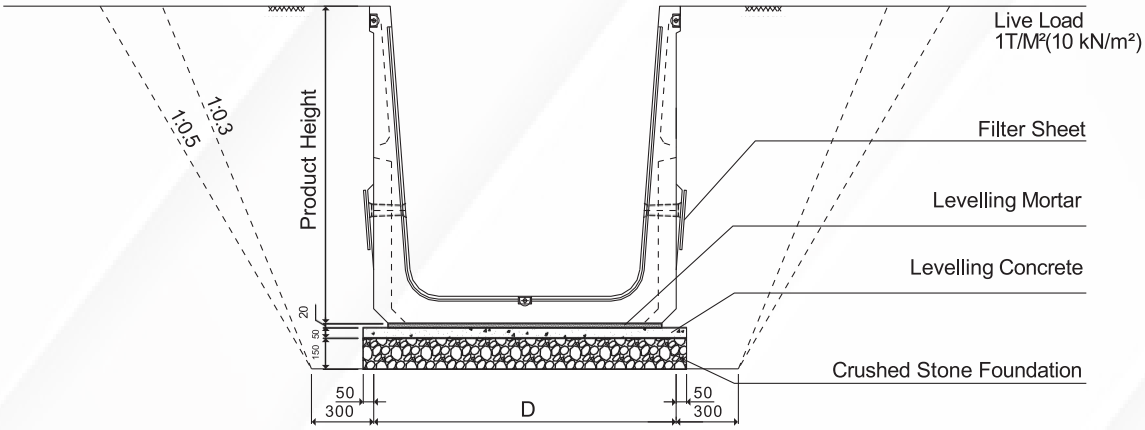

FRONT VIEW

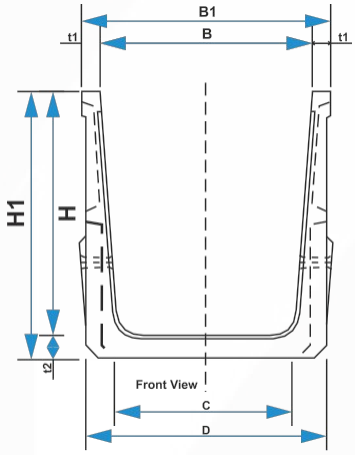

SIDE VIEW

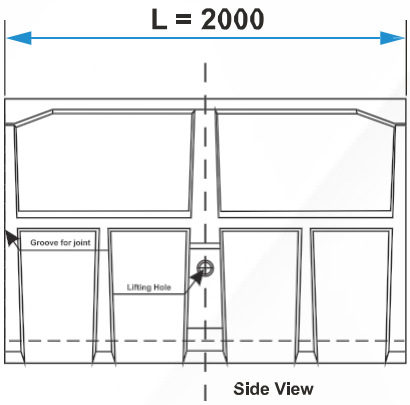

TYPICAL GROOVE FOR JOINT

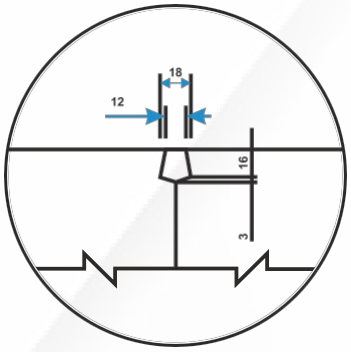

H : 900

Width: B	600	700	800	900	1000	1100	1200	1300	1400	1500	1600	1700	1800
A	780	880	980	1080	1180	1280	1380	1480	1580	1680	1780	1880	1980
C	650	750	850	950	1050	1150	1250	1350	1450	1550	1650	1750	1850
D	740	840	940	1040	1140	1240	1340	1440	1540	1640	1740	1840	1940
H1	990	990	990	990	990	990	990	990	990	990	990	990	990

H : 1200

Width: B	900	1000	1100	1200	1300	1400	1500	1600	1700	1800	1900	2000
A	1080	1180	1280	1380	1480	1580	1680	1780	1880	1980	2080	2180
C	920	1020	1120	1220	1320	1420	1520	1620	1720	1820	1920	2020
D	1010	1140	1240	1340	1440	1540	1640	1740	1840	1940	2040	2140
H1	1310	1310	1310	1310	1310	1310	1310	1310	1310	1310	1310	1310

H : 1300

Width: B	900	1000	1100	1200	1300	1400	1500	1600	1700	1800	1900	2000
A	1100	1200	1300	1400	1500	1600	1700	1800	1900	2000	2100	2200
C	940	1040	1140	1240	1340	1440	1540	1640	1740	1840	1940	2040
D	1060	1160	1260	1360	1460	1560	1660	1760	1860	1960	2060	2160
H1	1420	1420	1420	1420	1420	1420	1420	1420	1420	1420	1420	1420

H : 1400

Width: B	900	1000	1100	1200	1300	1400	1500	1600	1700	1800	1900	2000
A	1100	1200	1300	1400	1500	1600	1700	1800	1900	2000	2100	2200
C	920	1020	1120	1220	1320	1420	1520	1620	1720	1820	1920	2020
D	1060	1160	1260	1360	1460	1560	1660	1760	1860	1960	2060	2160
H1	1530	1530	1530	1530	1530	1530	1530	1530	1530	1530	1530	1530

H : 1500

Width: B	900	1000	1100	1200	1300	1400	1500	1600	1700	1800	1900	2000
A	1100	1200	1300	1400	1500	1600	1700	1800	1900	2000	2100	2200
C	920	1020	1120	1220	1320	1420	1520	1620	1720	1820	1920	2020
D	1060	1160	1260	1360	1460	1560	1660	1760	1860	1960	2060	2160
H1	1640	1640	1640	1640	1640	1640	1640	1640	1640	1640	1640	1640

H : 1600

Width: B	900	1000	1100	1200	1300	1400	1500	1600	1700	1800	1900	2000
A	1100	1200	1300	1400	1500	1600	1700	1800	1900	2000	2100	2200
C	920	1020	1120	1220	1320	1420	1520	1620	1720	1820	1920	2020
D	1060	1160	1260	1360	1460	1560	1660	1760	1860	1960	2060	2160
H1	1740	1740	1740	1740	1740	1740	1740	1740	1740	1740	1740	1740

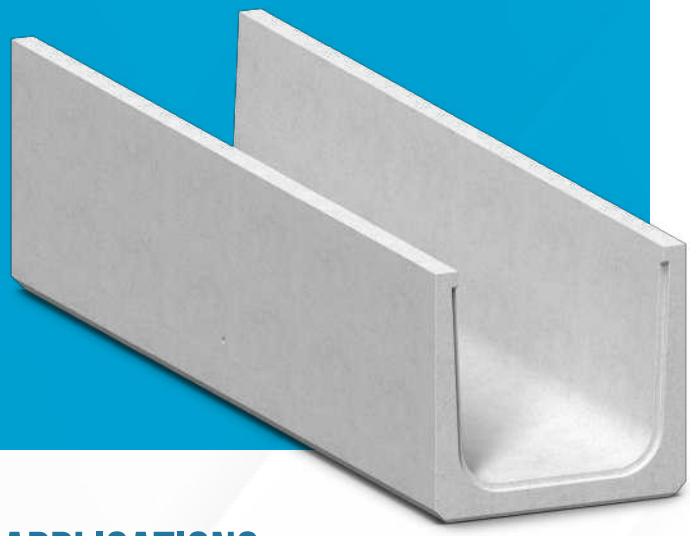

U SHAPE DRAIN (LIGHT)

APPLICATIONS

Ideal for stromwater management and housing power and telecommunication cables.

SECTION

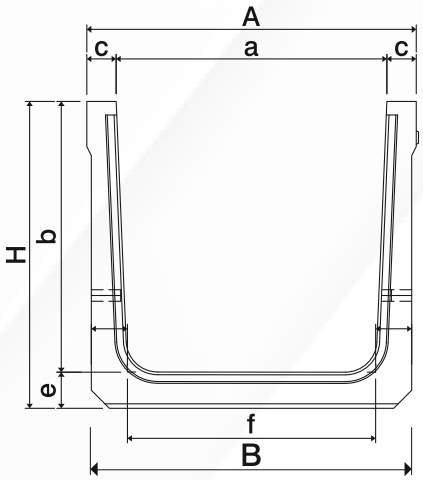

SIDE VIEW

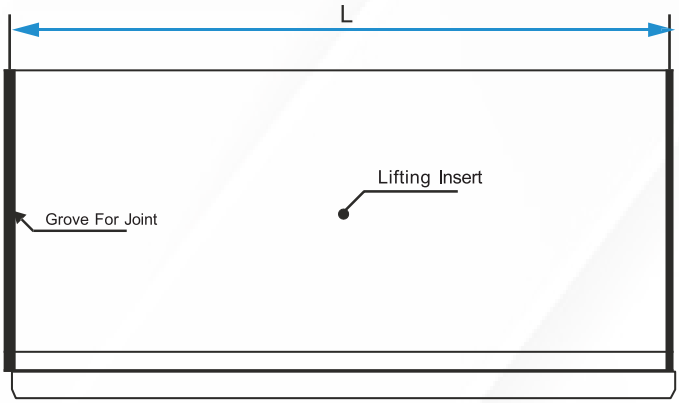

Drain (mm)	Dimensions of U shape drain (mm)								
a x b	L	A	B	H	a	b	c	e	f
300 x 300	2000	420	410	370	300	300	60	70	270
450 x 450	2000	550	540	520	450	450	50	70	400
600 x 600	2000	730	710	680	600	600	65	80	550
750 x 750	2000	890	870	840	750	750	70	90	690
900 x 900	2000	1070	1040	1010	900	900	85	110	820

STANDARD COVER

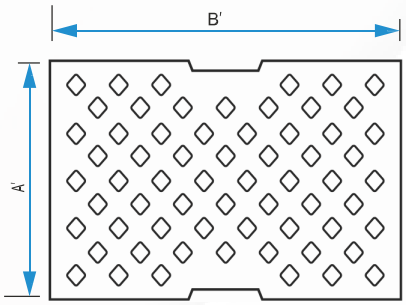

Cover plan

PERFORATED COVER

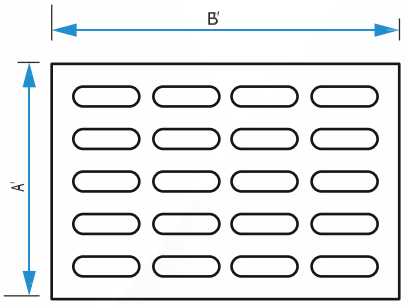

Cover plan

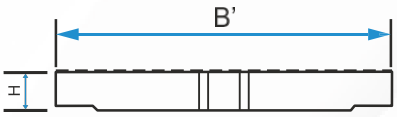

Cover Side View
Cover Hole

Size (mm)	Lid Dimension (mm)		
a x b	A'	B'	H'
300 x 300	500	420	60
450 x 450	500	550	70
600 x 600	500	730	80
750 x 750	500	890	90
900 x 900	500	1070	100

TYPICAL FOUNDATION DETAILS

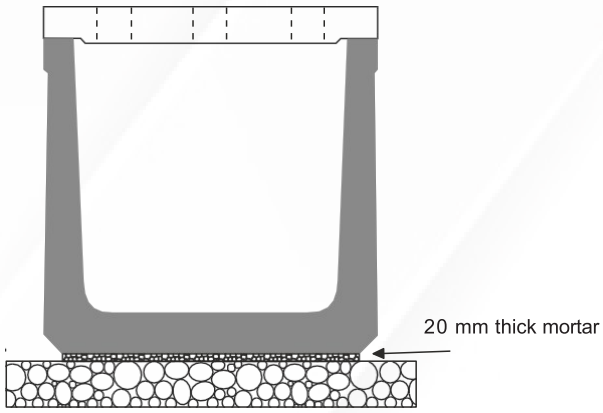

TYPICAL JOINT DETAILS

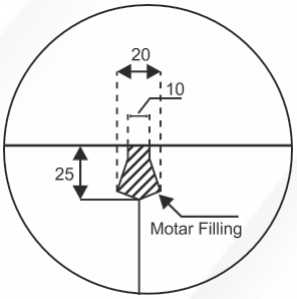

PRECAST BOX CULVERT

APPLICATIONS

Used for stromwater drainage, Power ducts and road crossings as an alternative to pipe culverts.

FRONT VIEW

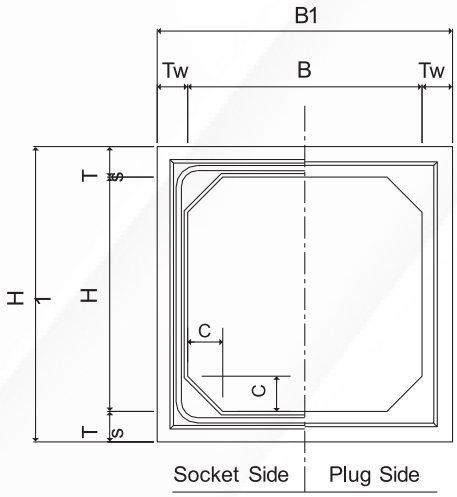

SIDE VIEW

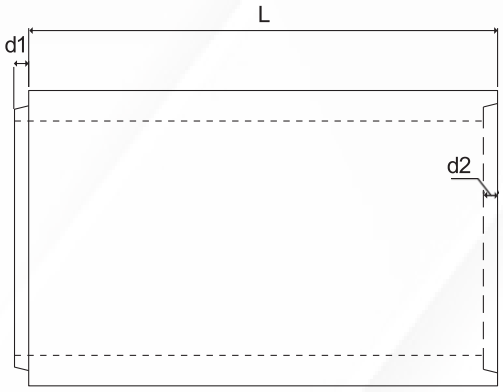

B X H (mm)	B (mm)	B1 (mm)	H (mm)	H1 (mm)	L (mm)
500x500	500	680	500	740	2000
600x600	600	780	600	840	2000
800x800	800	1060	800	1060	2000
800x900	800	1060	900	1160	2000
1000x1000	1000	1260	1000	1260	2000
1200x1200	1200	1460	1000	1260	2000
1200x1400	1200	1460	1400	1600	2000
1500x1400	1500	1760	1400	1700	2000
2000x2000	2000	2320	2000	2360	2000
2500x2500	2500	2900	2500	2940	2000

TYPICAL FOUNDATION DETAILS

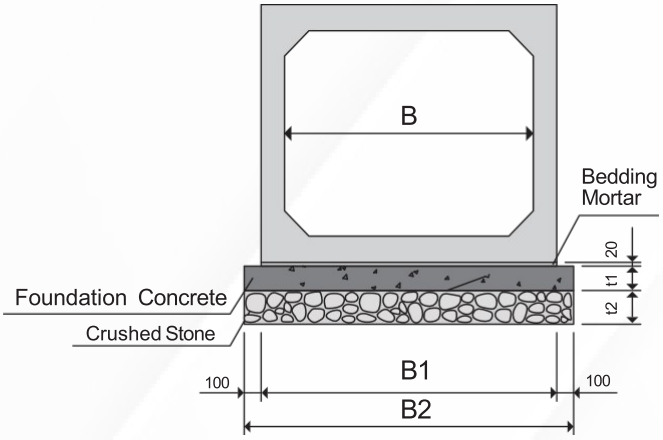

B	Size (mm)	
	X1	X2
600~1000	110	160
1100~2500	160	230

TYPICAL JOINT DETAILS

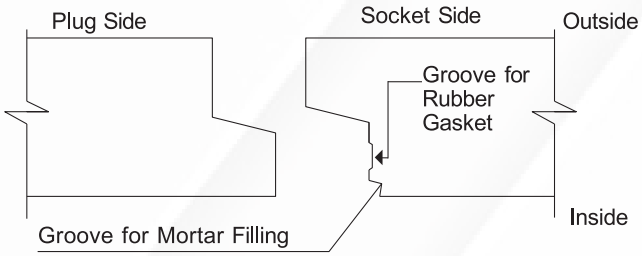

- Plug & Socket Joint
- Flange Bolt Connection (Available in Selected Sizes)
- Sealing Material : Rubber Gasket

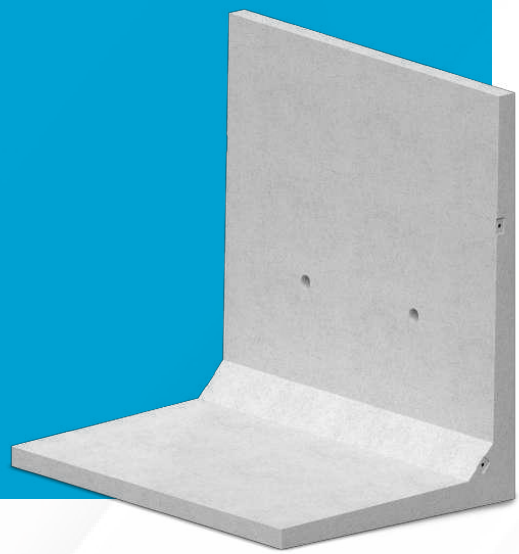

EARTH RETAINING WALL

APPLICATIONS

- Prevents Soil erosion
- Retains soil near structure
- Stabilizes Sloped soil
- Ideal for Landscaping

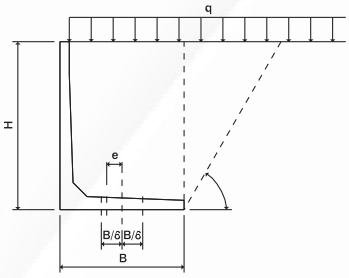

TYPICAL FOUNDATION DETAILS

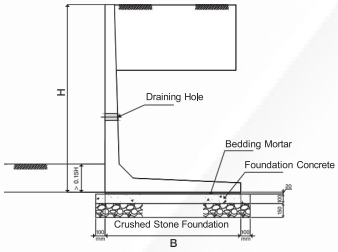

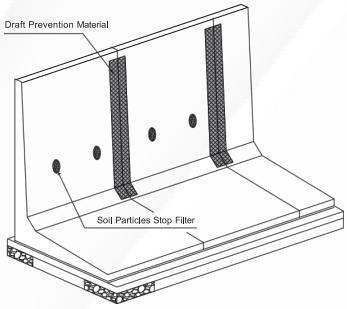

Reinforced Concrete Unit Weight	Yc = 24.5 KN/m
Unit Weight of soil	Ys = 19 kN/ms
Angle of internal friction of soil	0=30 °
Overburden load	q = 10 kN/m?
Sliding safety factor	Fs ⩾1.5
Eccentricity (for overtuning)	lel ⩽B/6

Height (mm)	Dimensions							
A	B	t1	t2	t3	t4	g	h	l
600	680	70	70	70	70	100	300	2000
800	760	80	80	80	80	100	400	2000
1000	850	90	90	90	90	100	500	2000
1200	970	100	100	100	100	120	600	2000
1400	1090	100	120	100	120	120	700	2000
1600	1210	100	130	100	130	150	800	2000
1800	1330	100	140	100	140	150	800	2000
2000	1450	100	150	100	150	150	800	2000
2250	1600	100	170	100	170	180	900	2000
2500	1750	100	180	100	180	180	900	2000
2750	1900	100	200	100	200	200	1000	2000
3000	2050	100	220	100	220	220	1000	2000

PRECAST HEAVY SINGLE PANEL COMPOUND WALL

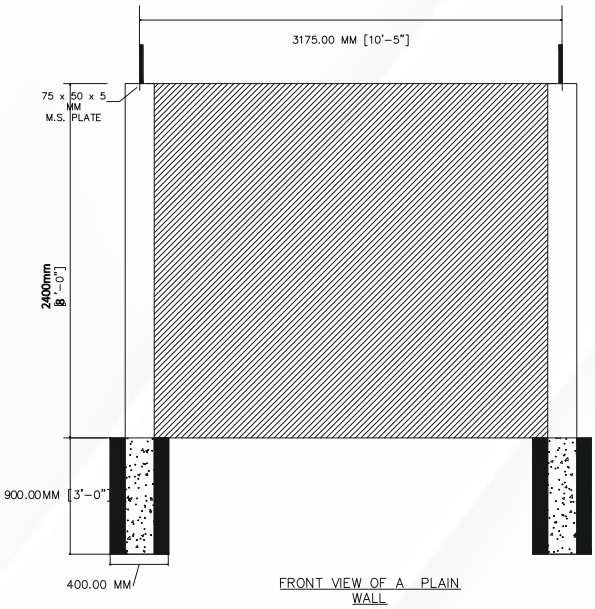

FRONT VIEW OF A PLAIN WALL

TOP VIEW

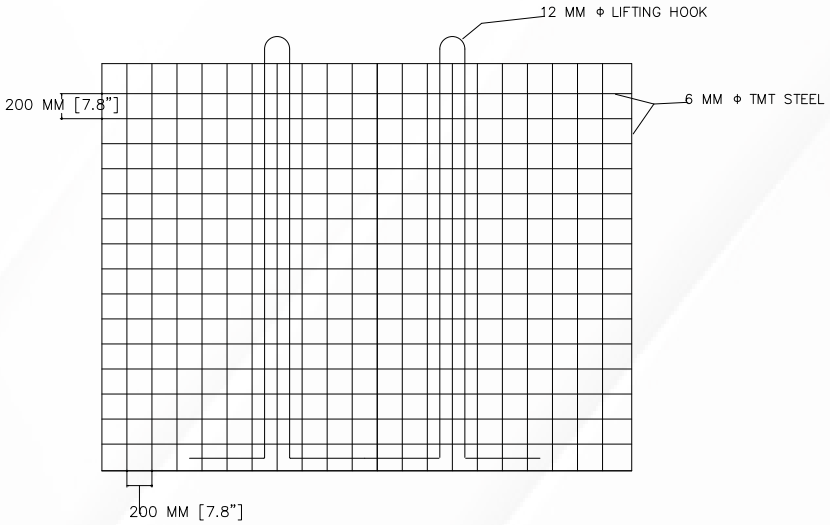

REINFORCEMENT @ 200 MM C/C FOR FULL PRECAST WALL

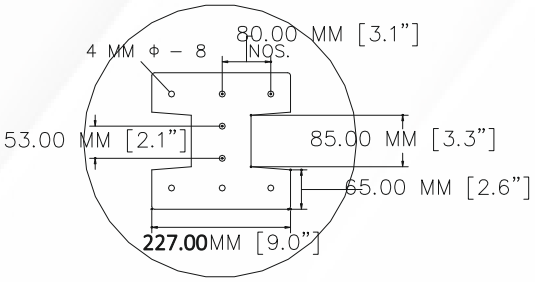

CROSS SECTION OF A COLUMN

Description	Column	Panel
Height	2700mm to 4500mm	3175 x 1800mm 3175mm x 2400mm
Weight	100 kg per meter	1200kg (6 feet) 1500 kg (8 feet)
Thickness	227mmX227mm 300mmX227mm	75mm
Steel	High Carbon 4mm	6mm & 12mm TMT
Material Grade	M30 / M40	M30 / M40
Colour	Grey(Cement)	Grey(Cement)

PRECAST HEAVY COMPOUND WALL (3 Feet Panel)

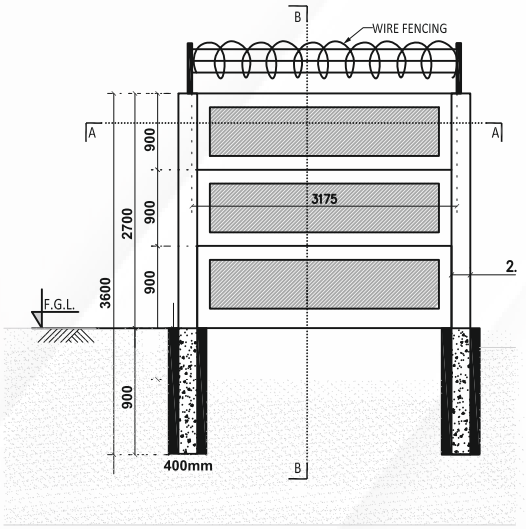

FRONT VIEW OF A PANELLED WALL

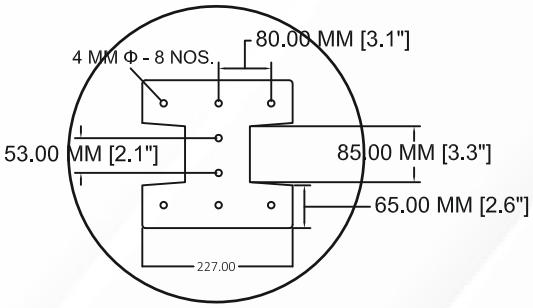

CROSS SECTION OF A COLUMN
M:30

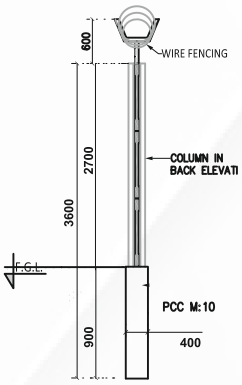

SECTION : B-B

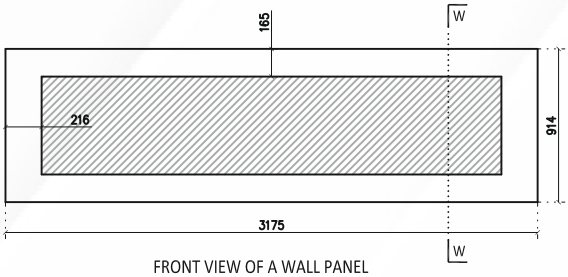

FRONT VIEW OF A WALL PANEL

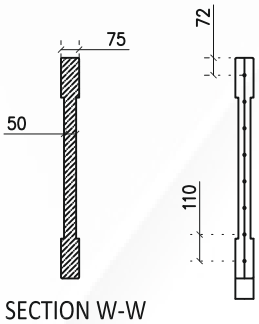

SECTION W-W

Description	Column	Panel
Height	2700mm to 4500mm	3175mm x 900 mm
Weight	100 kg per meter	460 kg
Thickness	227mmX227mm	75mm
Steel	High Carbon 4mm	High Carbon 4mm
Material Grade	M30 / M40	M30 / M40
Colour	Grey(Cement)	Grey(Cement)
Pre Stressed Strength	15.2 kn	9.3 kn


SCE-15

SILICON INFRATECH

FACTORY ADDRESS

201, Village - Rethvania, Chikhli - Vansda Road, Near Manekpore Char Rasta, Ta-Chikhli, Dis - Navsari 396560 - Gujarat.

+91 99252 22152 | +91 92271 39653

www.siliconinfratech.com

siliconinfratech2024@gmail.com

CERTIFIED ISO 9001:2015 COMPANY

MAKE IN INDIA